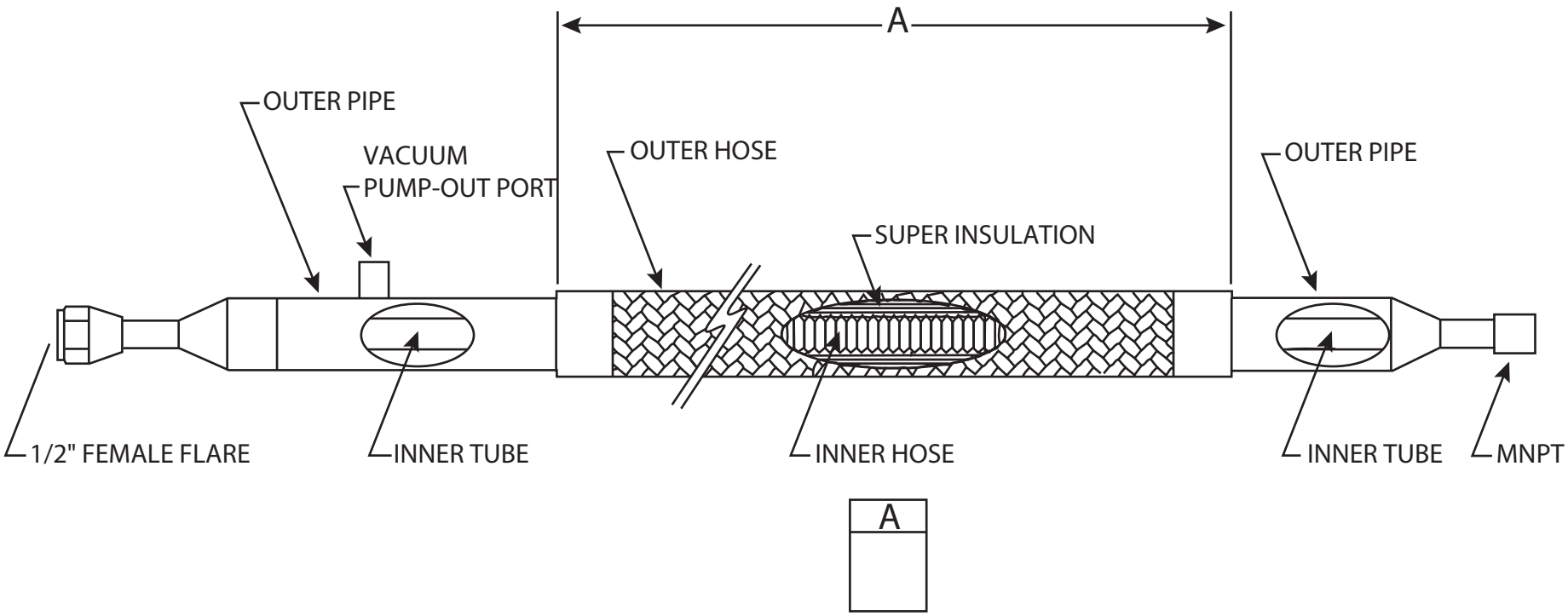
A
OUTER PIPE
VACUUM
PUMP-OUT PORT
OUTER HOSE
SUPER INSULATION
OUTER PIPE
1/2" FEMALE FLARE
INNER TUBE
INNER HOSE
INNER TUBE
MNPT
A